Product Information Sheet

M-SERIES 28" MEGAFRAME® MINI DATA CABINET

28" (710 mm) M-Series Mini Data Network Cabinet

This convenient height cabinet is specifically designed for restricted space installations or where equipment requirements do not justify a full size cabinet. The 19" or 23" wide cabinet comes in three depths (internal measurement of 14", 24" and 30" (360 mm, 610 mm and 760 mm) and is provided with casters. It can be conveniently positioned under a standard 30" (760 mm) counter.

The shipping weight depends on the selected cabinet configuration. Minimum shipping weight is 70 lb. (31.8 kg) maximum is 97 lb (44.0 kg).

Specifications:
- Provides 13 RMU of rack-mount space
- Available in 19"EIA or 23" EIA standard rack widths
- Available in three depths; 14", 24" and 30" (360 mm, 610 mm and 760 mm)
- Load Rating: 300 lb (136.1 kg)

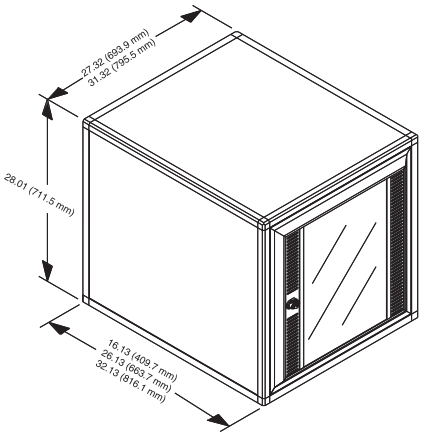

Ordering :

M-Series Mini Data Network Cabinet Part Numbers

Example Cabinet Part Number: M1910-112

prefix	1st digit	2nd digit	3rd digit	4th digit	5th digit	6th digit	7th digit
M	**Width** 1=19" 2=23"	**Height** 9=28" (710 mm)	**Depth** 1=14" (360 mm) 2=24" (610 mm) 3=30" (760 mm)	**Style** 0, 3	**Color** 1=Gray 2=White 7=Black	**Doors** 0-4	**Shipping** 2=Assembled

Cabinet Style
0=Tapped rails with side panels
3=Square-punched rails with side panels

Doors
0=No front or rear doors
1=Plexiglass front/metal rear
2=Metal front/metal rear
3=Vented plexiglass front/perforated metal rear
4=Perforated metal front/perforated metal rear

Height Dimensions	
All Cabinet Styles	**28" (710 mm)**
Usable Vertical Panel Space	13 RMU, 22.75"
Overall Height without Leveling Feet	28.01"
Overall Height with Leveling Feet	N/A
Overall Height with Casters	28.95"
Frame Vertical Opening	23.89"

Width Dimensions		
Usable Equipment Panel Width	**19" EIA**	**23" EIA**
Overall Width	27.32" (693.9 mm)	31.32" (795.5 mm)
Frame Horizontal Opening	20.20" (513.1 mm)	24.20" (614.7 mm)

Depth Dimension Cabinet Only (With Doors)			
Nominal Cabinet Depth	**14"**	**24"**	**30"**
Maximum Mounting Depth - Rail to Rail	14.00"	24.00"	30.00"
Overall Depth - Inside Door to Inside Door	17.22"	27.22"	33.22"
Overall Depth - Door Face to Door Face	17.62"	27.62"	33.62"

Depth Dimension Frame Only (Without Doors)			
Nominal Cabinet Depth	**14"**	**24"**	**30"**
Maximum Mounting Depth - Rail to Rail	14.00"	24.00"	30.00"
Overall Depth	16.13"	26.13"	32.13"

Shipping Weights: Minimum 70 lb Maximum 97 lb

CHATSWORTH PRODUCTS, INC.

©2009 Chatsworth Products, Inc. All rights reserved. CPI, CPI Passive Cooling, Saf-T-Grip, Seismic Frame, SlimFrame and MegaFrame are federally registered trademarks of Chatsworth Products, Inc. Cube-iT Plus, Evolution, OnTrac, QuadraRack, Simply Efficient and TeraFrame are trademarks of Chatsworth Products, Inc. All other trademarks belong to their respective companies. 05/09