Panasonic
ideas for life

HD Dome Network Camera

WV-SC384

18x optical zoom with 8x digital zoom enabling 144x zoom.

36x Extra Optical Zoom under VGA resolution with 8x digital zoom enabling 288x zoom.

Key Features

- 720p HD images up to 30 fps
- Newly developed 1.3 Megapixel MOS Sensor
- Multiple H.264 (High profile) streams and JPEG streams ensure simultaneous real time monitoring and high resolution recording by "UniPhier®", Panasonic's proprietary System LSI platform.
- Full frame (Up to 30 fps) transmission at 1,280 x 960 image size
- 18x optical zoom. 36x extra optical zoom at VGA resolution with 8x digital zoom enabling 288x zoom.
- Wide Dynamic Range and ABS (Adaptive Black Stretch) technologies deliver wider dynamic range compared with conventional cameras.
- Face Wide Dynamic Range technology ensures clear face image.
- H.264 and MPEG-4 are selectable for system migration.
- High sensitivity with Day/Night function : 0.6 lx (Color), 0.5 lx (B/W) at F1.6 (Wide)
- Adaptive Digital Noise Reduction: 2D-DNR and 3D-DNR integration ensures reduced noise and motion blur in various conditions.
- Superior color reproduction by primary (RGB) color filter
- Electronic sensitivity enhancement: Auto (Up to 16x) / OFF
- Selectable light control modes: Outdoor / Indoor / Fixed electronic shutter
  Outdoor / Indoor: Electronic shutter and ALC lens iris control are automatically controlled depending on the mode and luminance level.
  Fixed electronic shutter: Up to 1/10,000 fixed electronic shutter can be selectable.
- Panning with auto flip function can be performed 0 to 360 degrees.
- PTZ control can be taken on the user friendly GUI with 16 speeds pan/tilt and new "Drag and Zoom" operation enabling finer control. 256 speeds available for system with WV-CU950 system controller.
- Up to 64 preset positions
- 360 map shot: 8 thumbnail images at 45 deg. intervals make it simple to direct the camera easily by clicking on a thumbnail.
- Industrial grade Pan/Tilt/Zoom mechanism for high reliability
- VMD (Video Motion Detector) with 4 programmable detection areas, 15 steps sensitivity level and 10 steps detection size
- Face detection function detects the position of human face and the information is sent by XML or video stream.
- Meta data for VMD is supplied to work with the WJ-ND400 playback VMD function.
- Privacy Zone can mask up to 2 private areas, such as house windows and entrances/exits.
- Alarm sources including 3 terminal input, VMD and Panasonic alarm command can trigger actions such as SDHC/SD memory recording, FTP image transfer, E-mail notification, Indication on browser, Alarm terminal output, and Panasonic protocol output.
- Full duplex bi-directional audio allows interactive communication between camera site and monitoring site.
- JPEG image compression ratio can be changed by alarm so that higher quality image can be provided.
- Prioritized stream control: One of the video streams can be prioritized when multiple recorders or client PCs are accessing the camera so that the recorder or the client PC can maintain the frame rate.
- SDHC/SD Memory card slot for manual recording (H.264 / JPEG), alarm recording (H.264 / JPEG) and backup upon network failure (JPEG)
- H.264/MPEG-4 max. bit rate/client and Total bit rate control allows flexible network traffic management. Frame rate priority mode controls bit rate and compression ratio to provide the specified frame rate.
- Multi-language GUI and setup menu: English, French, Italian, Spanish, German, Russian (PAL) / English, French (NTSC) * Installation required except for English
- IPv4/IPv6 protocol supported
- Analog Monitor output for easier installation
- Supports SSL, DDNS (viewnetcam, RFC2136)
- Still images (JPEG) can be viewed on mobile phones via Internet.
- ONVIF compliant model

Standard Accessories

- CD-ROM*1 .....1 pc.
- Installation Guide.....1 pc.

The followings are for installation.

- Camera Mount Bracket (w/safety wire) .....1 pc.
- Camera Fixing Screw ..... 2 pcs. (incl. 1 spare)
- Decorative Cover.....1 pc.
- Power Cable Plug.....1 pc.
- Code Label*2 .....1 pc.

*1 The CD-ROM contains the operating instructions (PDFs) and different kinds of tool software programs.
*2 This label may be required for network management. The network administrator shall retain the code label.

Optional Accessories

Inner Dome Cover **WV-Q157**	Indoor Dome Covers **WV-Q156C** (Clear) **WV-Q156S** (Smoke) (Smoke Type)	Embedded Ceiling Mount Brackets **WV-Q155C** (Clear) **WV-Q155S** (Smoke) (Smoke Type)
Wall Mount Brackets **WV-Q154C** (Clear) **WV-Q154S** (Smoke) (Smoke Type)		Ceiling Mount Bracket **WV-Q105**

* Not compatible with optional accessories of conventional cameras

Specifications

TV System		NTSC	PAL
Camera	Image Sensor	1/3 type MOS Sensor	
	Effective Pixels	Approx. 1.3 megapixel	
	Scanning Mode	Progressive scan	
	Scanning Area	4.8 mm (H) x 3.6 mm (V) (3/16" (H) × 5/32" (V))	
	Minimum Illumination	Color: 0.6 lx (F1.6, Auto slow shutter: Off (1/30 s), AGC: High, WDR Off) 0.038 lx (F1.6, Auto slow shutter: max. 16/30 s, AGC: High, WDR Off) BW: 0.5 lx (F1.6, Auto slow shutter: Off (1/30 s), AGC: High) 0.031 lx (F1.6, Auto slow shutter: max. 16/30 s, AGC: High)	
	White Balance	ATW1 / ATW2 / AWC	
	Light Control Mode	Indoor scene (50 Hz / 60 Hz) / Outdoor scene / Fix shutter	
	Shutter Speed	1/30, 3/100, 3/120, 2/100, 2/120, 1/100, 1/120, 1/250, 1/500, 1/1,000, 1/2,000, 1/4,000, 1/10,000	
	Wide Dynamic Range	ON / OFF	
	Face Wide Dynamic Range	ON / OFF	
	Adaptive Black Stretch	ON / OFF	
	AGC	ON (LOW, MID, HIGH) / OFF	
	Auto Slow Shutter	OFF (1/30 s), max. 2/30 s, max. 4/30 s, max. 6/30 s, max. 10/30 s, max. 16/30 s	
	Simple Black and White Mode	OFF / AUTO	
	Digital Noise Reduction	High / Low	
	Video Motion Detection	ON / OFF, 4 areas available	
	Privacy Zone	ON / OFF (up to 2 zones available)	
	Up Side Down	Ceiling mount only	
	Image Stabilizer	ON / OFF	
	Camera Title (OSD)	ON / OFF	
Lens	Focal Length	4.7 mm ~ 84.6 mm	
	Zoom Ratio	18x / 36x with extra optical zoom (at VGA resolution)	
	Digital (Electronic) Zoom	8x (Max. 288x combined with extra optical zoom under VGA)	
	Angular Field of View	H: 3.2° (Tele) ~ 55.2° (Wide), V: 2.4° (Tele) ~ 42.1° (Wide)	
	Maximum Aperture Ratio	1 : 1.6 (Wide) ~ 2.8 (Tele)	
	Focus Range	1.5 m ~ ∞	
	Aperture Range	F1.6 ~ 22, Close	
Pan and Tilt	Panning Range	0° ~ 350°	
	Panning Speed	Manual: approx. 0.5°/s ~ 100°/s, Preset: up to approx. 300°/s	
	Tilting Range	–30° ~ 90° (upward-level-downward) Tilting angle limit: 10° / 5° / 3° / 0° / –3° / –5° / –10° / –15° / –20° / –25° / –30°	
	Tilting Speed	Manual: approx.0.5°/s ~ 100°/s, Preset: up to approx. 100°/s	
	Proportional Pan/Tilt Control	Yes	
	Number of Preset Positions	64	
	Auto Mode	Auto pan / Preset sequence / 360 map-shot / Preset map-shot	
	Image Hold	ON / OFF	
	PTZ Position Display	ON / OFF	
	Self Return	10 s / 20 s / 30 s / 1 min / 2 min / 3 min / 5 min / 10 min / 20 min / 30 min / 60 min	
	Pan/tilt flip *1	ON / OFF	
	Map Shot	360 map shot / preset map shot	
Browser GUI	Camera Control	Pan/Tilt (16 steps), Zoom, Focus, Click centering, Drag zoom, Iris, Preset position call and program, Auto mode	
	Display Mode	Spot, Quad: Image from 16 cameras can be displayed in 4 different Quad screens or 16 split screen (JPEG only). 20 characters camera title available.	
	Camera Title	Up to 20 characters (alphanumeric characters, marks), Character size: Small	
	Clock Display	Time: 12H / 24H, Date: 5 formats on the browser, Summer time (Manual/AUTO)	
	Alarm Control	Reset	
	One Shot Capture	A still picture will be displayed on a newly opened window.	
	Audio	Mic (Line) Input: ON / OFF Volume adjustment: Low / Middle / High, Audio Output: ON / OFF Volume adjustment: Low / Middle / High	
	SD Memory Data Download	Still or motion images recorded in the SDHC/SD memory card can be downloaded.	
	GUI/Setup Menu Language	English, French (Installation required for French)	English, French, Italian, Spanish, German, Russian (Installation required except for English)
	System Log	Up to 100 (Internal), Up to 4,000 (SDHC/SD memory when the recording format is set to JPEG.) error logs	
	Supported OS	Microsoft® Windows® 7 Professional 64 bit/32 bit, Microsoft® Windows Vista® Business SP1 32 bit, Microsoft® Windows® XP Professional SP3 The language of the OS must be same as selected GUI language.	
	Supported Browser	Windows® Internet Explorer® 8.0 (32 bit) (Microsoft® Windows® 7 Professional 64 bit/32 bit), Windows® Internet Explorer® 7.0 (Microsoft® Windows Vista® Business SP1 32 bit), Microsoft® Internet Explorer® 6.0 SP3 (Microsoft® Windows® XP Professional SP3)	
Network	Network IF	10Base-T / 100Base-TX, RJ-45 connector	
	Image Resolution *2 *3 — Aspect ratio: [4 : 3]	H.264: 1,280 x 960 / VGA (640 x 480) / QVGA (320 x 240), up to 30 fps MPEG-4: VGA (640 x 480) / QVGA (320 x 240), up to 30 fps JPEG (MJPEG): 1,280 x 960 / 640 x 480 / 320 x 240, up to 30 fps	
	Image Resolution *2 *3 — Aspect ratio: [16 : 9]	H.264: 1,280 x 720 / 640 x 360 / 320 x 180, up to 30 fps JPEG (MJPEG): 1,280 x 720 / 640 x 360 / 320 x 180, up to 30 fps	
	H.264/ MPEG-4 *2 — Transmission Mode	Constant bitrate / Framerate priority / Best effort	
	H.264/ MPEG-4 *2 — Frame Rate	1 / 3 / 5 / 7.5 / 10 / 15 / 20 / 30 fps	1 / 3 / 5 / 7.5 / 10 / 12 / 15 / 20 / 30 fps
	H.264/ MPEG-4 *2 — Bit Rate/Client	64 / 128 / 256 / 384 / 512 / 768 / 1,024 / 1,536 / 2,048 / 3,072 / 4,096 / 8,192* kbps / Unlimited * H.264 mode Only	
	H.264/ MPEG-4 *2 — Image Quality	LOW / NORMAL / FINE	
	H.264/ MPEG-4 *2 — Refresh Interval	0.2 s / 0.25 s / 0.33 s / 0.5 s / 1 s / 2 s / 3 s / 4 s / 5 s	
	H.264/ MPEG-4 *2 — Transmission Type	UNICAST / MULTICAST	
	JPEG (MJPEG) — Image Quality	0 SUPER FINE / 1 FINE / 2 / 3 / 4 / 5 NORMAL / 6 / 7 / 8 / 9 LOW (10 steps: 0-9)	
	JPEG (MJPEG) — Transmission Type	PULL / PUSH	
	Transmission Interval	0.1 fps - 30 fps (JPEG frame rate will be restricted when displaying both JPEG and H.264/MPEG-4 images.)	
	Audio Compression	G.726 (ADPCM) 32 kbps / 16 kbps, G.711 64 kbps	
	Audio Mode	OFF / Mic (Line) input / Audio output / Interactive (Half duplex) / Interactive (Full duplex)	
	Authentication for Audio	Level 1 only / Level 2 higher / All users	
	Total Bit Rate	64 / 128 / 256 / 384 / 512 / 768 / 1,024 / 2,048 / 4,096 / 8,192 kbps / Unlimited	
	Supported Protocol	IPv6: TCP/IP, UDP/IP, HTTP, HTTPS, RTP, FTP, SMTP, DNS, NTP, SNMP, DHCPv6 IPv4: TCP/IP, UDP/IP, HTTP, HTTPS, RTSP, RTP, RTP/RTCP, FTP, SMTP, DHCP, DNS, DDNS, NTP, SNMP, UPnP	
	FTP Client	Alarm image transmission, FTP periodic transmission (When the FTP transmission is failed, backup on an optional SDHC/SD memory card is available.)	
	Multi-Screen	Up to 16 camera images can be displayed simultaneously on a multi-screen. (Including the camera itself)	

TV System		NTSC	PAL
Network	Maximum Concurrent Access Number	Up to 14 (Depends on network conditions)	
	SDHC/SD Memory Card (Option)	H.264 recording: Manual REC / Alarm REC (PRE/Post) / Schedule REC JPEG recording: Manual REC / Alarm REC (Post) / Backup upon network failure Compatible SD (SDHC) card: Panasonic 256 MB, 512MB, 1GB, 2 GB, 4 GB*, 8 GB*, 16GB*, 32GB* model *SDHC card	
	Face Detection	ON / OFF (with XML notification)	
	Cellular Phone Compatibility	JPEG image, panning / tilting / zoom control, AUX control (by access level)	
Alarm	Alarm Source	3x Terminal inputs, VMD, Command alarm	
	Alarm Actions	SD memory recording, E-mail notification, Indication on browser, Camera positioning, Preset position 1 ~ 64, FTP image transfer, Terminal output, Panasonic protocol output, Auto track	
	Alarm Log	With SD memory card: 5,000 logs, Without SD memory card: 1,000 logs	
	Schedule	Alarm/VMD/Access permission, Preset position call, Position refresh, H.264 recording	
Input / Output	Monitor Output (for adjustment)	1.0 V [p-p] / 75 Ω, NTSC composite, ø3.5 mm mini jack	1.0 V [p-p] / 75 Ω, PAL composite, ø3.5 mm mini jack
	Microphone/Line Input	ø3.5 mm monaural mini jack, Input impedance: approx. 2 kΩ	
	Audio Output	ø3.5 mm stereo mini jack (monaural output) Line level Output impedance: Approx. 600 Ω, Line level	
	External I/O Terminals	ALARM IN 1, ALARM IN 2 / ALARM OUT, ALARM IN 3 / AUX OUT (x1 each)	
General	Safety/EMC Standard	UL (UL60065), FCC (Part15 ClassA), C-UL (CAN/CSA C22.2 No.60065), DOC (ICES003 ClassA)	CE (EN60065, EN55022 ClassB, EN55024), GOST (GOST R 51558)
	Power Source/ Consumption	12 V DC, PoE (IEEE802.3af compliant) 12 V DC : 690 mA, PoE 48 V : 10 W / 190 mA (Class 0 device)	
	Ambient Operating Temperature/Humidity	–10 °C ~ +50 °C (14 °F ~ 122 °F), 90% or less (whitout condensation)	
	Dimensions	ø115 mm x 155 mm (H) (ø4-17/32" x 6-3/32" (H)) (excluding the 12 V DC power cord plug)	
	Mass (approx.)	900 g (1.99 lbs.)	

*1 The pan/tilt-flip function cannot be activated by clicking live images. When the zoom ratio is adjusted to the "TELE" side, images will be partially hidden even if the pan/tilt-flip function is activated. *2 H.264 and MPEG-4 are alternative. *3 [4 : 3] and [16 : 9] are alternative.

Part Names and Functions

Front View

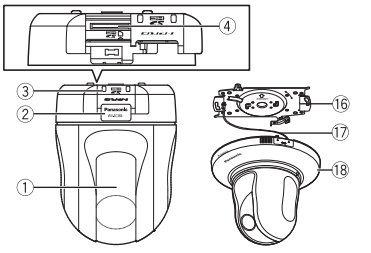

Rear View

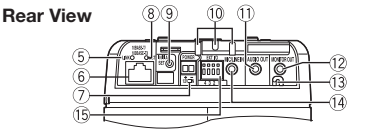

① Transparent Part
② Panasonic Logo Plate
③ SDHC/SD Memory Card Slot Cover
④ SDHC/SD Memory Card Slot
⑤ Link Indicator
⑥ Network Connector
⑦ 12 V DC Power Supply Terminal
⑧ Access Indicator
⑨ INITIAL SET Button
⑩ Cable Guide
⑪ Audio Output Connector
⑫ Monitor Out Connector for Adjustment
⑬ Safety Wire Holder
⑭ Microphone/Line Input Connector
⑮ External I/O Terminals
⑯ Camera Mount Bracket
⑰ Safety Wire
⑱ Decorative Cover

Appearance

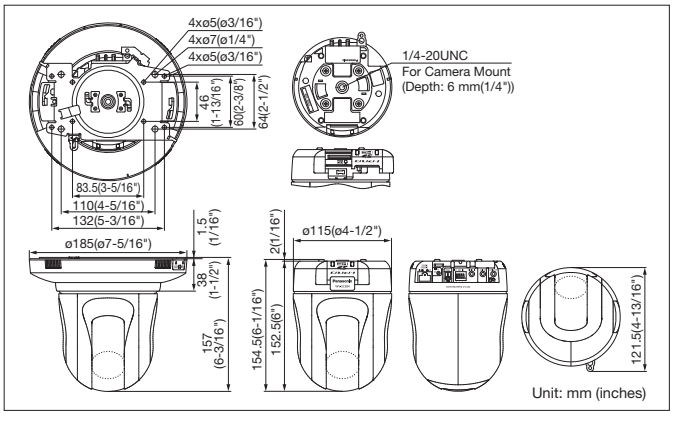

Trademarks and registered trademarks

– Microsoft, and Windows are registered trademarks of Microsoft Corporation in the U.S. and other countries.
– UniPhier is a registered trademark of Panasonic Corporation.
– "Super Dynamic", "SDⅡ", "SDⅢ", "SD5", "SD5Link", "i-PRO" and "i-PRO SmartHD" logos are trademarks or registered trademarks of Panasonic Corporation.
– ONVIF and the ONVIF logo are trademarks of ONVIF Inc.

Important

– Safety Precaution: carefully read the operating instructions and installation manual before using this product.
– Panasonic can not be responsible for network performance and/or other manufacturer products that reside on the network.

• All TV pictures are simulated. • Masses and dimensions are approximate. • Specifications are subject to change without notice. • These products may be subject to export control regulations. • All product pictures are NTSC models.

DISTRIBUTED BY:

Sold by:
TWAcomm.com
http://www.TWAcomm.com
Toll Free: (877) 389-0000

Panasonic®

http://panasonic.net/security/

Printed in Japan (2A-073L)