651
Small-format Omnidirectional Palmheld Dynamic Paging Microphone

Description

The Astatic 651 is a small-format squeeze-to-talk, dynamic microphone for critical communications applications. The 651 has a tailored frequency response providing clear transmission and maximum intelligibility of speech. The housing is built to withstand rough mechanical impact while the transducer resists atmospheric extremes. The 651 has a simple to operate DPDT long-life, trouble-free, leaf switch. It has a low-impedance output and is factory wired normally open. The 651 may be rewired in the field if a line shorting function is desired.

The Astatic 651 is an excellent choice for any application requiring a small-format palmheld microphone for discrete or tight-mounting spaces such as life-safety systems or paging stations where small size is required. The 651 is also suited to most public address and general, multiple-use, commercial paging applications such as factories, airports, lobbies, restaurants, warehouses, etc.

Features

- For commercial public-address and paging applications as well as security, emergency and life safety
- Small size for inclusion into life-safety systems or other paging stations where small size is indicated
- Omnidirectional for forgiving pick-up of users that may not be committed to the mic
- Low impedance (600 ohms) for long cable runs and hum resistance
- Rugged polyester mic element resists effects of extreme temperature, moisture, acids, alkalines and solvents
- Durable large-gauge wire grille
- Molded plastic that is resistant to high impact
- Permanently-attached 6ft (1.8m), heavy-duty, 4-conductor coiled cord with stripped and tinned ends

Microphone

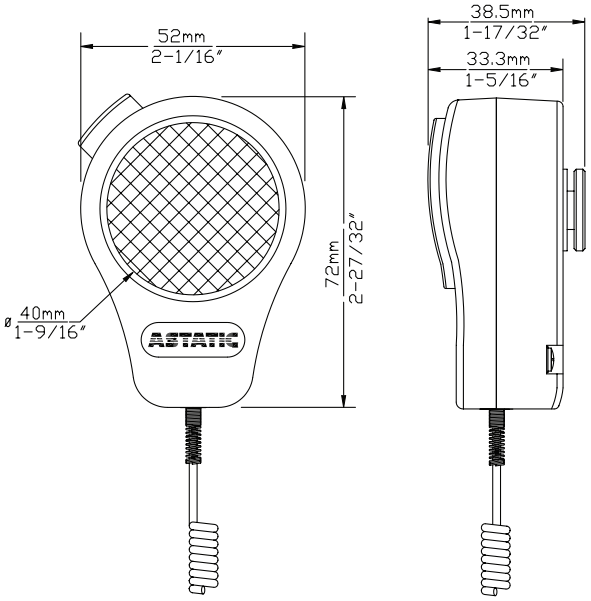

ASTATIC®
Commercial Audio Products
Installed since 1931

Sold by:
TWAcomm.com
http://www.TWAcomm.com
Toll Free: (877) 389-0000

651
Small-format Omnidirectional Palmheld Dynamic Paging Microphone

Specifications†

Operating Principle .....Moving Coil Dynamic
Polar Pattern .....Omnidirectional
Frequency Response .....500Hz - 8KHz
Sensitivity .....-49dBV (3.6mV) @ 1Pa
Impedance .....600 ohms
Cable .....6ft (1.8m) extended, four-conductor, two-conductor shielded, coiled
Switch .....DPDT momentary leaf
Case .....Impact-resistant plastic
Dimensions.....(See drawing)
Net Weight [Mass] .....4.9oz [139g]
Packaged Weight [Mass].....8.0oz [227g]
RF Immunity .....Meets or exceeds EN55103-2, E1, E2, E3 and E4.

RoHS Compliant

†Specifications subject to change without notice.

Mounting Clip

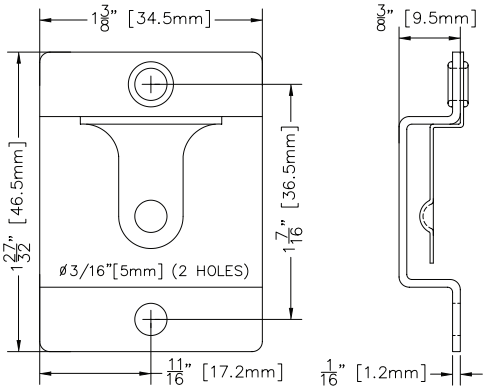

Frequency Response

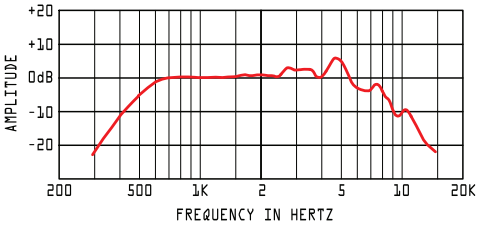

Wiring Diagram

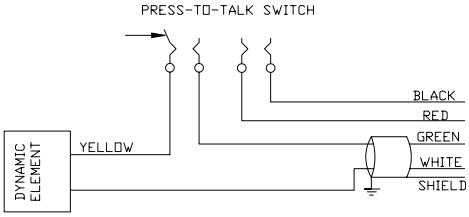

Architects' and Engineers' Specification

The microphone will be an Astatic 651. The microphone will be a dynamic, moving-coil type with a diaphragm made of polyester. The frequency response will be 500Hz - 8KHz. The microphone will have an omnidirectional polar pattern. The sensitivity of the 651 will be -49dBV (3.6mV) @ 1 Pa. The microphone will have a 6ft coiled cable that is permanently attached to the microphone housing with incorporated cable stress relief. The cable will be made of 4-conductor wire with two of the conductors shielded by a braided wire; all leads are to be terminated with stripped and tinned ends.

The microphone will have a DPDT momentary leaf, push-to-operate switch. The DPDT switch is to be wired normally open. The dimensions of the microphone will be 2-27/32" [72mm] long, 2-1/16" [52mm] wide, and 1-17/32" [38.5mm] high. The net weight will be 4.9oz [139g] including the cable. The microphone will have a durable plastic body that resists scratches. The microphone will be black with a black cable. A mounting disc incorporated into the body of the mic will fit any standard mounting clip. A mounting clip will be supplied as an accessory.

The Astatic 651 is specified.

Two-Year Limited Warranty

Astatic Commercial Audio Products hereby warrants that this product will be free of defects in material and workmanship for a period of two years from the date of purchase. In the unlikely event that a defect occurs Astatic will, at its option, either repair or replace with a new unit of equal or greater value. Retain proof of purchase to validate the purchase date and return it with any warranty claim.

This warranty excludes exterior finish or appearance, damage from abuse, misuse of the product, use contrary to Astatic's instructions or unauthorized repair. All implied warranties, merchantability, or fitness for a particular purpose is hereby disclaimed and Astatic hereby disclaims liability for incidental, special or consequential damages resulting from the use or unavailability of this product.

This warranty gives you specific legal rights and you may have other rights that vary from state to state. Some states do not allow the exclusion or limitation of incidental or consequential damages or limitations on how long an implied warranty lasts, so the above exclusions and limitations may not apply to you.

Note: No other warranty, written or oral is authorized by Astatic Commercial Audio Products.

Shipping Instructions

Please call our customer service department at 440-349-4900 for a pre-approved return authorization number.

Carefully repack the unit and return the insured package to: Astatic Commercial Audio Products, 6573 Cochran Road, Building I, Solon, Ohio 44139.
RETURNS WITHOUT A PRE-APPROVED RETURN AUTHORIZATION NUMBER WILL BE REFUSED.

If outside the United States, contact your local dealer or distributor for warranty details.

©2007 Astatic Commercial Audio Products
Part No. 46873-80-03 rev03 Feb2007

ASTATIC®
Commercial Audio Products
Installed since 1931

Astatic Commercial Audio Products
6573 Cochran Rd. Building I Solon, Ohio 44139 U.S.A.
Tel: (440) 349-4900 Fax: (440) 248-4902 Sales: (800) 421-3161
www.astaticinstalled.com