THIS COPY IS PROVIDED ON A RESTRICTED BASIS AND IS NOT TO BE USED IN ANY WAY DETRIMENTAL TO THE INTERESTS OF PANDUIT CORP.

PANDUIT P/N	WEIGHT
CFPSE4	.91 LB/10 PCS (413 g/10 PCS.)

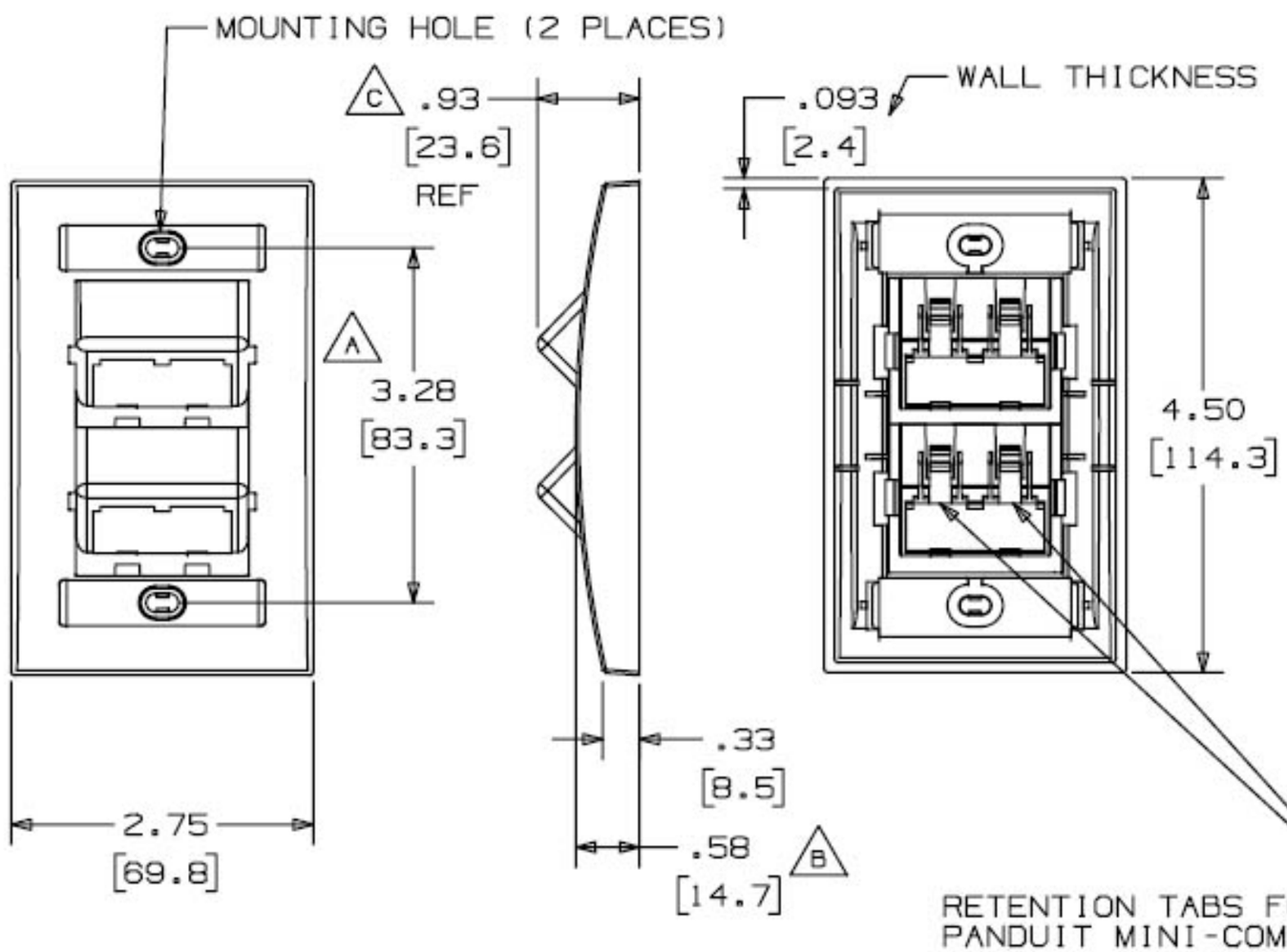

NOTES: D

1. SEE CURRENT CATALOG FOR ADDITIONAL PART NUMBER SUFFIXES TO INDICATE COLOR AND OR PACKAGE QUANTITY.
2. BEZELS ACCEPT FLAT(CHF2), SLOPED(CHS2S) AND BLANK(CHB2) MINI-COM INSERTS.
   THE MINI-COM FLAT AND SLOPED INSERTS ACCEPT ALL MINI-COM CONNECTOR MODULES.
3. THIS PART IS SUPPLIED WITH TWO #6-32 X 1" LONG SLOTTED/PHILLIPS PAN HEAD MOUNTING SCREWS WITH NON-THREADED LEAD POINT, LABELS AND LABEL HOLDER/SCREW COVERS.
4. DIMENSIONS IN PARENTHESES ARE IN METRIC.

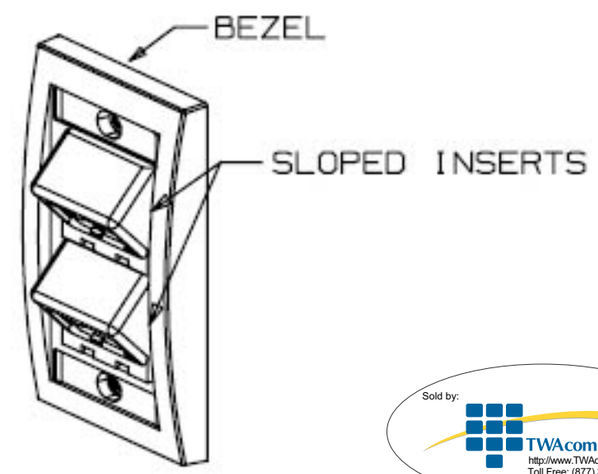

Sold by: TWAcomm.com http://www.TWAcomm.com Toll Free: (877) 389-0000

Sold by: TWAcomm.com http://www.TWAcomm.com Toll Free: (877) 892-2666

REV	DATE	BY	CHK	DESCRIPTION	ECN	CHK	CUST	SUP
1	5-1-98	DW		C. WAS .580 ±.010; D. REV'D PIECES /WEIGHT. A. WAS 3.23; B. WAS .930±.010.	35544-03			
R	3-28-96	DW	CEF	RELEASED TO PRODUCTION.	35544-03	CEF		

CAD FILENAME/LAYERS: D35544BC_CFPSE4_00

PANDUIT CORP. TINLEY PARK, ILLINOIS

SINGLE GANG MINI-COM SLOPED FACEPLATE (CFPSE4) CUSTOMER DRAWING

UNLESS OTHERWISE SPECIFIED, DIMENSIONAL TOLERANCES ARE:
(.X) ± (.XXX) ±.010(.3)
(.XX) ±.03(.8) ANGLES ±

UNLESS OTHERWISE SPECIFIED, ALL DIMENSIONS ARE GIVEN IN INCHES, THIRD ANGLE PROJECTION.

DRAWN BY	MAT'L:	SCALE
DW	ABS	NONE
DATE 3-28-96		DRAWING NO. 35544-03
CHECKED BY CEF		DWG SIZE A