Turn-Type Lampholders

Standard size, pedestal-based fluorescent lampholders of molded, white thermosetting urea. Quickwire pressure terminals accept stranded No. 18 gauge, twisted and overtinned, or No. 18 solid or solder-dipped leads, stripped 3/8". Multiple terminal slots permit double connections at each contact. Recessed wire wells completely enclose conductor, insulating against shorts. Screws assembled or furnished bulk are #6-32 x 3/8".

Cat. Nos. 13357, 13358 & 13359 Series

Lampholder with Internal Shunt Connection

Specially designed for use with electronic ballasts.

Provides easier fixture assembly by eliminating need for jumper-wire. Large “S” identifies shunted version.

Cat. No. 23357

- **660W-600V**
- **UL Listed** E-5833
- **CSA Certified** LR-5863
- **NOM Certified** 057

Cat. No.	A Dim. Thickness	Side Groove Mounting	With Captive Nut Assembled	With Captive Nut & Staked Set Screw Assembled
13357	11/32 (8.73)	For #18 ga. panel	–	–
13357-00N	11/32 (8.73)	For #18 ga. panel	X	–
13357-0NX	11/32 (8.73)	For #18 ga. panel	–	X
23357	11/32 (8.73)	For #18 ga. panel	–	–
13358	3/8 (9.53)	Less side grooves	–	–
13358-00N	3/8 (9.53)	Less side grooves	X	–
13358-0NX	3/8 (9.53)	Less side grooves	–	X
13359	11/32 (8.73)	Less side grooves	–	–
13359-00N	11/32 (8.73)	Less side grooves	X	–
13359-0NX	11/32 (8.73)	Less side grooves	–	X

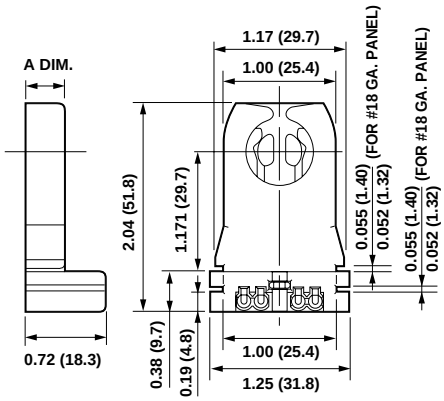

Cat. No. 13357-00N

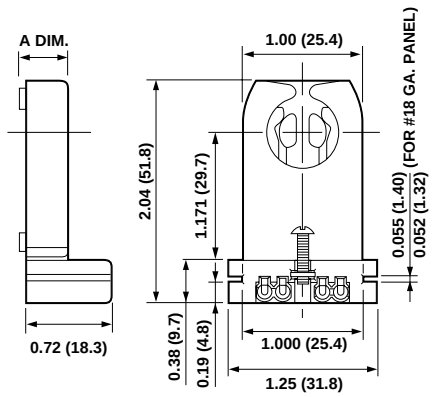

Cat. No. 13358-0NX

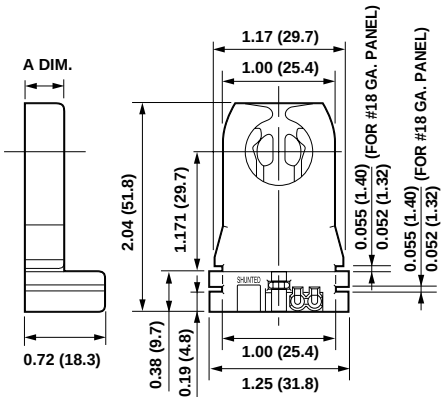

Cat. No. 23357