New products from CABLOFIL®

INNOVATORS IN CABLE MANAGEMENT

Sold by:
TWAcomm.com
http://www.TWAcomm.com
Toll Free: (877) 892-2666

TXF 35 TELEX RAIL

1" 35 MM | 1" 35 MM | 10' 3 M

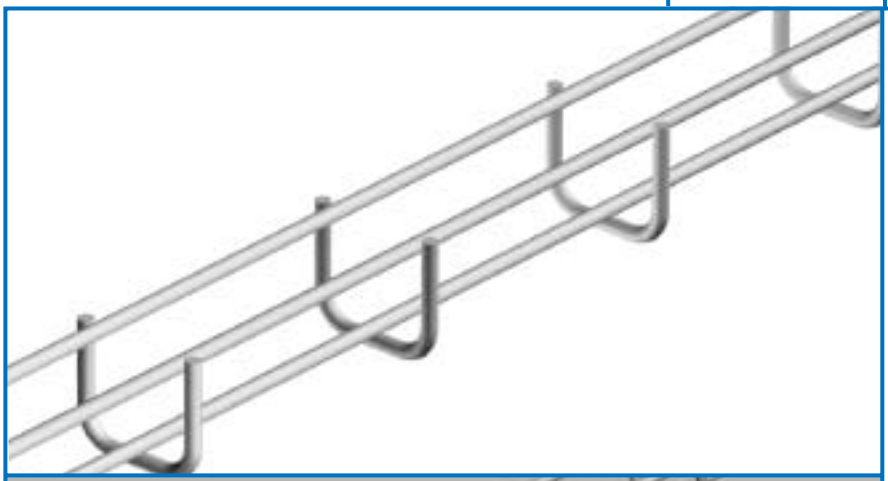

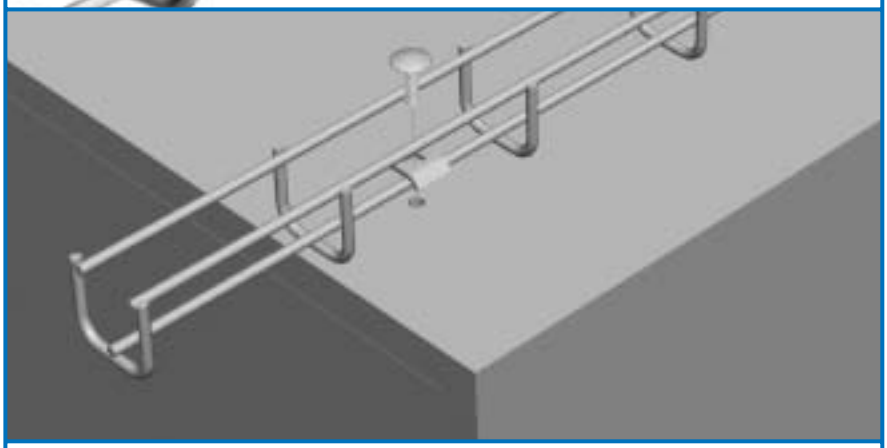

- Unique wire arrangement allows tray to lay flat on cabinets or machinery without rocking.
- Use in applications where small runs of cable are needed.
- Use EZ BN1/4 and CE 25 for mounting attachment.

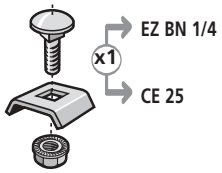

	H INCHES	H MM	W INCHES	W MM	L FT	L M	LBS	KG
TXF 35	1"	35	1"	35	10'	3	3.3	1.5

EZ GC 304L 316L BL PE

New from Cablofil, Telex Rail, a wire cable tray developed for small cable runs that attaches directly to equipment, cabinets or walls. A unique cradle wire design gives the tray a solid and steady base without rocking. Telex Rail is designed for complex installations with small diameter cables on custom machinery or for power and control cables that need support or protection. As with all Cablofil tray, it can be fabricated on site to match any installation configuration with side action bolt cutters.

Finishes: EZ=Electrozinc GC=Hot Dipped Galvanized 304L=Stainless Steel 304L 316L=Stainless Steel 316L BL=Black Painted PE=Custom Painted

All dimensions are nominal. See product cut sheets at www.cablofil.com

EZ•29•03•04

CABLOFIL®
INNOVATORS IN CABLE MANAGEMENT

Corporate Offices
8319 State Route 4
Mascoutah, IL 62258 USA
Phone: 618-566-3230
800-658-4641
Fax: 618-566-3250
www.cablofil.com

Complete Line of Accessories

1" 35 MM | 1" 35 MM | Only applies to CTXF 35: 10' 3 M

CTXF 35
TELEX RAIL COVER

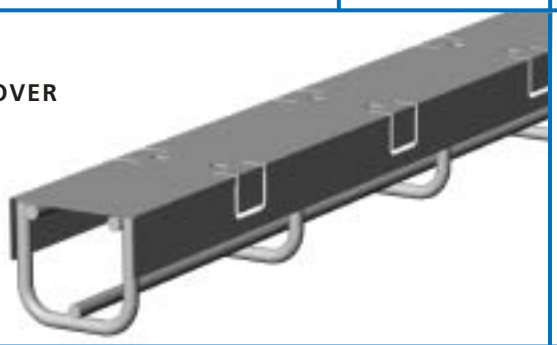

- Cover eliminates dirt and dust build-up on cable.
- Field fabricate on-site to fit changes in levels.
- Provides physical protection for cables.
- Use built-in tabs for permanent attachment to tray.

UC35
TELEX RAIL STANDOFF SUPPORT

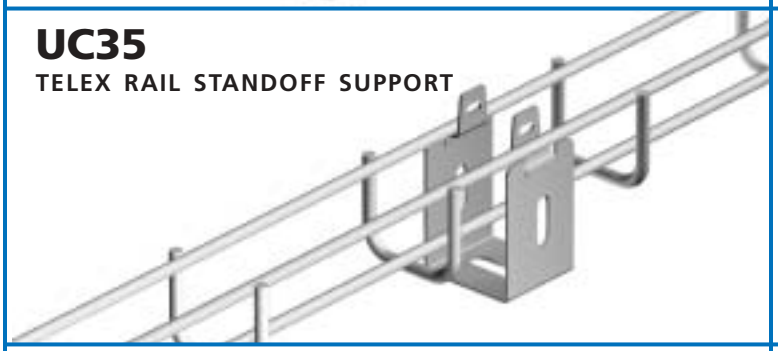

- Specially designed to attach Telex Rail to cabinet tops and channel framing.
- Fold over tabs secure tray without nuts and bolts. Just snap in place.

TEL CAT 30/41
SNAP-IN WALL HANGER SUPPORT

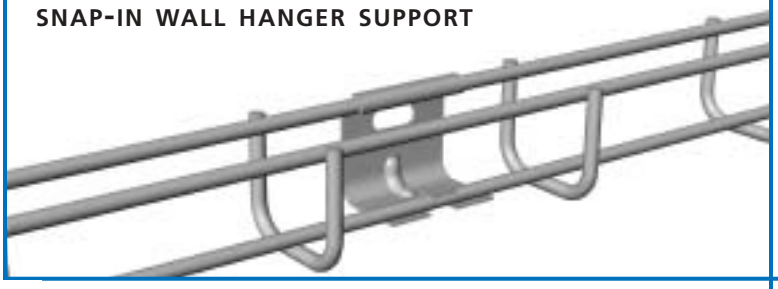

- Attaches Telex Rail to sides of cabinets, walls or channel framing.
- No screws required for tray attachment. Just snap in place.

A complete line of accessories have been specially designed for Telex Rail. The UC35 standoff support is useful when mounting to flat surfaces or channel framing. A snap-in wall bracket, TEL CAT 30/41, makes for fast installations on vertical surfaces. Both will secure the Telex Rail without additional hardware. Also available, the CTXF 35 cover keeps cables clean and safe. Built in tabs secure the cover to reduce install time.

Finishes: PG=Pre-Galvanized GC=Hot Dipped Galvanized
316L=Stainless Steel 316L BL=Black Painted PE=Custom Painted

	W			
	INCHES	MM	LBS	KG
CTXF 35	1"	35	2.6	1.2
UC 35	—	—	1.1	0.5
TEL CAT 30/41	—	—	0.1	.03

PG GC 316L BL PE

Sold by:
TWAcomm.com
http://www.TWAcomm.com
Toll Free: (877) 892-2666

All dimensions are nominal. See product cut sheets at www.cablofil.com