AIPHONE®

SPECIFICATIONS

AS-Series Sub Stations

For use with AP-M and MP-S Systems

AS-3A

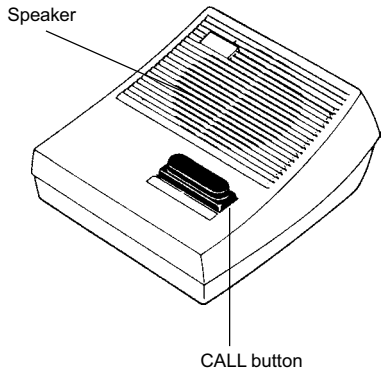

AS-3A FEATURES:

- Push button to call master station
- Call-in activates tone at master
- Call-in LED remains activated for 20 seconds after call button is released (MP-3S, AP-5M/10M only)
- Hands free communication when master answers
- Desk or wall mount (to 1-gang box or ring)

COMMON SPECIFICATIONS:

System:	AP-M or MP-S
Speaker:	20 ohms
Communication:	Hands free at sub
Conductors:	1 pair homerun per sub Use Aiphone wire #832202
Wiring Distance:	AP-M: 490' w/22AWG; 1200' w/18AWG MP-S: 330' w/22AWG; 720' w/18AWG
Dimensions:	7" x 5-13/16" x 3-1/16" (H x W x D)

AS-3N

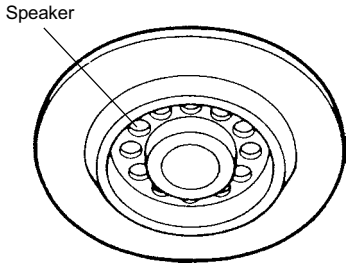

AS-3N FEATURES:

- Overhead hands free communication with master station
- Remote push button to call master station (optional)
- Call-in activates tone and light at master
- Call-in LED remains activated for 20 seconds after call button is released (MP-3S, AP-5M/10M only)
- Flush mounts in ceiling with provided equipment

Common Specifications, plus:

Call button:	Optional NP-B (with NP-W surface box if req'd)
Mounting:	Flush mount in ceiling
Dimensions:	7-1/16" x 1-7/8" (Diameter x Depth)

AH-108

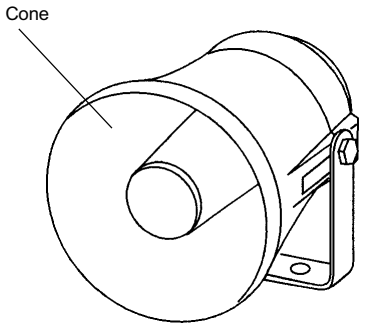

AH-108 FEATURES:

- Hands free communication with master station
- Remote push button to call master station (optional)
- Weather proof, heavy duty construction
- 8Ω, 10W horn with built-in non-polarized capacitor
- All metal weather proof construction for indoor or outdoor use
- Universal swivel mount base
- Beige baked enamel finish

Common Specifications, plus:

Call button:	Optional NP-B (with NP-W surface box if req'd)
Power Handling Capacity:	10 Watts (Continuous)
Impedance:	8Ω
Dispersion Angle:	120°
Sensitivity as a microphone:	-26dBM (Re: 10 dynes/cm^2)
Dimensions:	6-1/8" Bell x 6-1/2" Deep

Sold by:
TWAcomm.com
http://www.TWAcomm.com
Toll Free: (877) 892-2666

Aiphone Communication Systems • 1700 130th Ave. NE • Bellevue, WA 98005
(425) 455-0510 • FAX: (425) 455-0071 • (800) 692-0200 • www.aiphone.com

0603MBMK